POWERSCREEN®
TRAKPACTOR 320SR

HORIZONTAL IMPACTOR

GET STARTED

TECHNICAL SPECIFICATION - REV 12 01/11/2024

To use my interactive features I need to be opened in 'Adobe Acrobat Reader' click here to download

TRAKPACTOR 320SR

- OVERVIEW
- CRUSHER
  - CRUSHER SPECIFICATION
  - CRUSHER FEATURES
  - CRUSHER OPTIONS
- HOPPER
- VIBRATING GRIZZLY FEEDER
- PRODUCT CONVEYOR
- POWER UNIT & HYDRAULICS
- TRACKS
- POST-SCREEN
- CONVEYORS
- PLANT CONTROLS & OTHER
- OPTIONS
  - OPTIONS 2
  - OPTIONS 3
- POWERSCREEN® PULSE
- DIMENSIONS

OVERVIEW

SPECIFICATION

Total Weight VGF:	Tier 3: 47,140kg (103,926lbs) Bypass conveyor, twin pole magnet, grinding path	
	Tier 4F: 46,560kg (102,647lbs) Bypass conveyor, single pole magnet	
Total Weight PS:	Tier 3: 50,340kg (110,981lbs) Hopper extensions, extended bypass conveyor, 4 high blow bars, twin pole magnet, grinding path	
	Tier 4F: 51,000kg (112,436lbs) 4 high blow bars, extended bypass conveyor, single pole magnet, hydraulic folding mid section	
Transport	**Length**	17.58m (57' 8")
	Height	3.4m (11' 4")
	Width	3.1m (10' 2")
Working	**Length**	17.22m (56' 6")
	Height	4.71m (15' 5'')
	Width	5.82m (19' 1") with bypass conveyor deployed
Crusher Type:	Twin apron 4 bar impact crusher, feed opening 1130 x 800mm (44.5" x 31.5")	
Power Unit	Caterpillar C9.3 250 kW (335hp) or Scania DC9 313A 257 kW (350hp)	
Plant Colour	RAL 5021, RAL 7024, RAL 9005	

FEATURES & BENEFITS

The Powerscreen® Trakpactor 320SR Horizontal Shaft Impactor is a highly compact tracked crusher designed to offer both excellent reduction & high consistency of product yield.
The Powerscreen® Trakpactor 320SR is designed to give optimum performance in both quarry & recycling applications & is an ideal mid size contractors machine due to it's compact design & mobility.

- Output potential of up to 320 tph / 353 US tph - depending on material type & crusher settings
- Double deck grizzly feeder with under screen
- Radio remote control as standard
- Load management system to control feeder speed
- Suitable for a variety of feed materials
- Proven Terex impact crusher with hydraulic overload protection, 4 bar rotor & twin apron design
- Crusher speed variation through user friendly PLC control system
- Fully independent under crusher vibrating pan feeder (option)
- Modular conveyor with raise/lower facility to aid clearance of rebar
- Powerful overband magnet (optional)
- Designed to give optimum performance in both quarry, demolition & mining applications
- Hydraulically operated clutch & highly fuel efficient direct drive system
- Independent hydraulic pre-screen for increased fines removal before the chamber (option)
- SR configuration includes a detachable 2 deck 3.3m x 1.5m (11' x 5') post screen and fines conveyor
- Powerscreen Pulse Telemetry as standard

APPLICATIONS

Aggregate
Blasted rock
River rock

Recycling
C&D waste
Foundry waste

Mining
Processed ores
Processed minerals

TRAKPACTOR 320SR

- OVERVIEW
- CRUSHER
  - CRUSHER SPECIFICATION
  - CRUSHER FEATURES
  - CRUSHER OPTIONS
- HOPPER
- VIBRATING GRIZZLY FEEDER
- PRODUCT CONVEYOR
- POWER UNIT & HYDRAULICS
- TRACKS
- POST-SCREEN
- CONVEYORS
- PLANT CONTROLS & OTHER
- OPTIONS
  - OPTIONS 2
  - OPTIONS 3
- POWERSCREEN® PULSE
- DIMENSIONS

CRUSHER

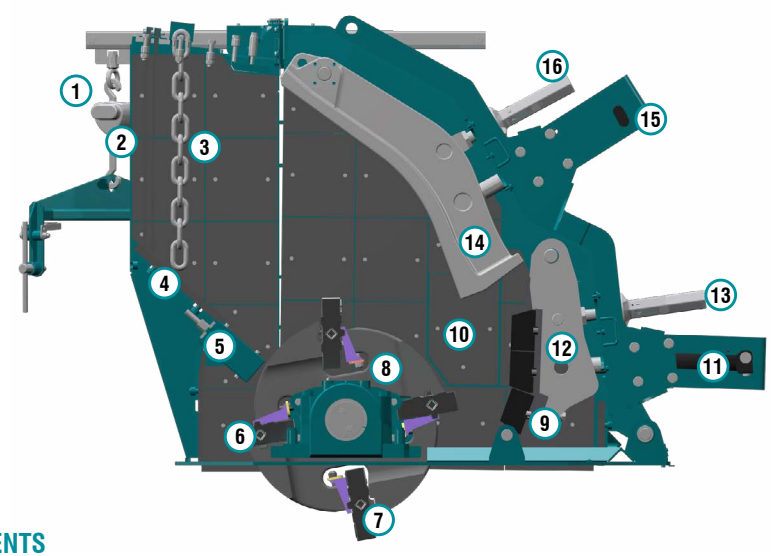

PRINCIPAL COMPONENTS

1: Crusher Opening
2: Rubber Curtain
3: Chain Curtain
4: Inlet Chute
5: Inlet Wear bar
6: Full Blow bar
7: Half Blow bar
8: Rotor
9-10: Wear liners
11: Control Cylinder
12: Bottom Impact Apron
13: Apron Adjustment Spindle
14: Top Impact Apron
15: Control Cylinder
16: Apron Adjustement Spindle

PRINCIPLES OF OPERATION

Material enters via crusher opening & slides down the inlet chute where it is struck by the blow bars fixed within the rotor. This initial impact breaks the material which is then accelerated towards the top apron where more reduction takes place on impact. This material then falls back onto the blow bars & the cycle is repeated until the material is small enough to pass between the top apron & blow bar. Further reduction occurs on the bottom apron until the material can again pass through the gap & discharge from the underside of the crusher.

Should an un-crushable object enter the chamber, the overload cylinders will relieve & allow the object to pass. The cylinders will then return to the pre-set crushing position. The pre-set gap is adjusted by turning the adjustment spindle whilst the weight of the apron is held on the cylinder (hydraulic assist).

The hydraulic cylinders are pre-loaded to minimise apron bounce & wear on the cylinders.
This arrangement also greatly reduces the oversize produced & is Patented: GB2455203

TRAKPACTOR 320SR

- OVERVIEW
- CRUSHER
  - CRUSHER SPECIFICATION
  - CRUSHER FEATURES
  - CRUSHER OPTIONS
- HOPPER
- VIBRATING GRIZZLY FEEDER
- PRODUCT CONVEYOR
- POWER UNIT & HYDRAULICS
- TRACKS
- POST-SCREEN
- CONVEYORS
- PLANT CONTROLS & OTHER
- OPTIONS
  - OPTIONS 2
  - OPTIONS 3
- POWERSCREEN® PULSE
- DIMENSIONS

CRUSHER SPECIFICATION

Feed opening:	1130mm x 800mm (44.5” x 31.5”)
Max lump size*:	450mm³ (18in³) / 780mm (31”) diagonally / 800 x 500 x 250mm (31 x 20 x 10”) slab *depending on material & blow bar specification
Rotor width:	1100mm (43.3”)
Rotor diameter:	1030mm (40.5”)
Number of aprons:	2
Max clearance:	180mm (7”) on both aprons
Max OSS setting:	150mm (6”) upper apron, 50mm (2”) lower apron
Min CSS setting:	75mm (2.9”) upper apron, 20mm (0.75”) lower apron
Blow bars:	Total of 4 blow bars
Blow bar removal:	Vertically
Blow bar configuration:	2 full & 2 half (Optional 4 full)
Setting adjustment:	Hydraulic assist
Overload protection:	Hydraulic
Rotor speeds:	595 - 735rpm (32 - 40 m/s) (105 - 131 ft/s)
Applications:	Demolition / recycling / quarry
Crusher weight:	9000kg (19,842lbs)
Full blow bar weight:	220kg (485lbs)
Side liners:	20mm (0.75”) thick, abrasive resistant steel

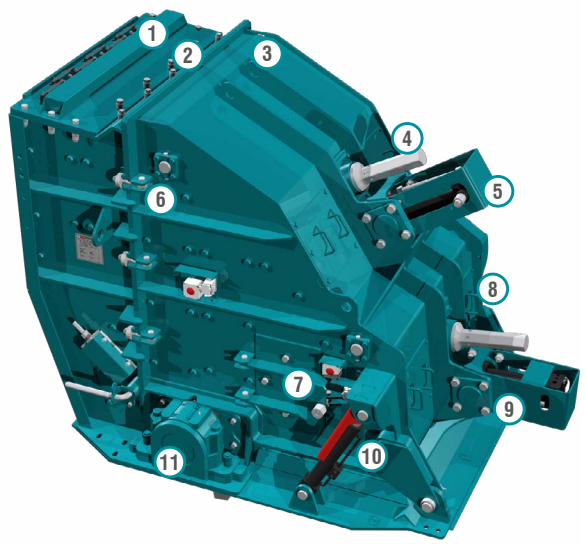

PRINCIPAL COMPONENTS

1: Chain curtain cover
2: Main welded body
3: Impactor hinged section
4: Toggle bolts
5: Inspector covers
6: Hydraulic overload & adjustment cylinders
7: Side door
8: Inspection covers
9: Bearing
10: Trunions
11: Hinged section opening cylinder

TRAKPACTOR 320SR

- OVERVIEW
- CRUSHER
  - CRUSHER SPECIFICATION
  - CRUSHER FEATURES
  - CRUSHER OPTIONS
- HOPPER
- VIBRATING GRIZZLY FEEDER
- PRODUCT CONVEYOR
- POWER UNIT & HYDRAULICS
- TRACKS
- POST-SCREEN
- CONVEYORS
- PLANT CONTROLS & OTHER
- OPTIONS
  - OPTIONS 2
  - OPTIONS 3
- POWERSCREEN® PULSE
- DIMENSIONS

CRUSHER FEATURES

Crusher body:	Fabricated from steel plate & fully lined with replaceable abrasion resistant liner plates. Hinged side door allows access to apron tips & rotor for gap measurements & inspection. Complete hinged section opens hydraulically to allow blow bar removal & replacement, apron & liner replacement or major maintenance
Rotor:	Cast steel & fitted with four reversible & replaceable blowbars
Bearings:	Double row self aligning spherical roller bearing fitted each end of rotor
Aprons:	Cast steel aprons with replaceable abrasion resistant wear plate on tip of bottom apron
Drive:	Direct through wedge belts with tensioning system on power unit
Lubrication:	Grease lubricated rotor bearings fitted with inner & outer independently lubricated heavy duty labyrinth seals
Blow bars:	Standard blow bar is martensitic steel, options are available in ceramic, medium chrome, medium chrome ceramic, high chrome, high chrome ceramic & toughened chrome

APPLICATIONS

This plant is designed for both demolition & quarrying applications. When fitted with martensitic or ceramic blow bars the crusher will tolerate small quantities of steel reinforcing bar in the feed. However, the machine is not designed to accept large pieces of steel or other un-crushable objects & the feed material should be assessed / inspected for suitability prior to crushing. It is vitally important that large pieces of steel or similar un-crushable objects are not allowed to enter the crushing chamber as severe damage & injury may occur.

When high chrome bars are fitted **all** steel should be removed from the feed material. The machine should only be used on quarry applications or clean materials such as asphalt.

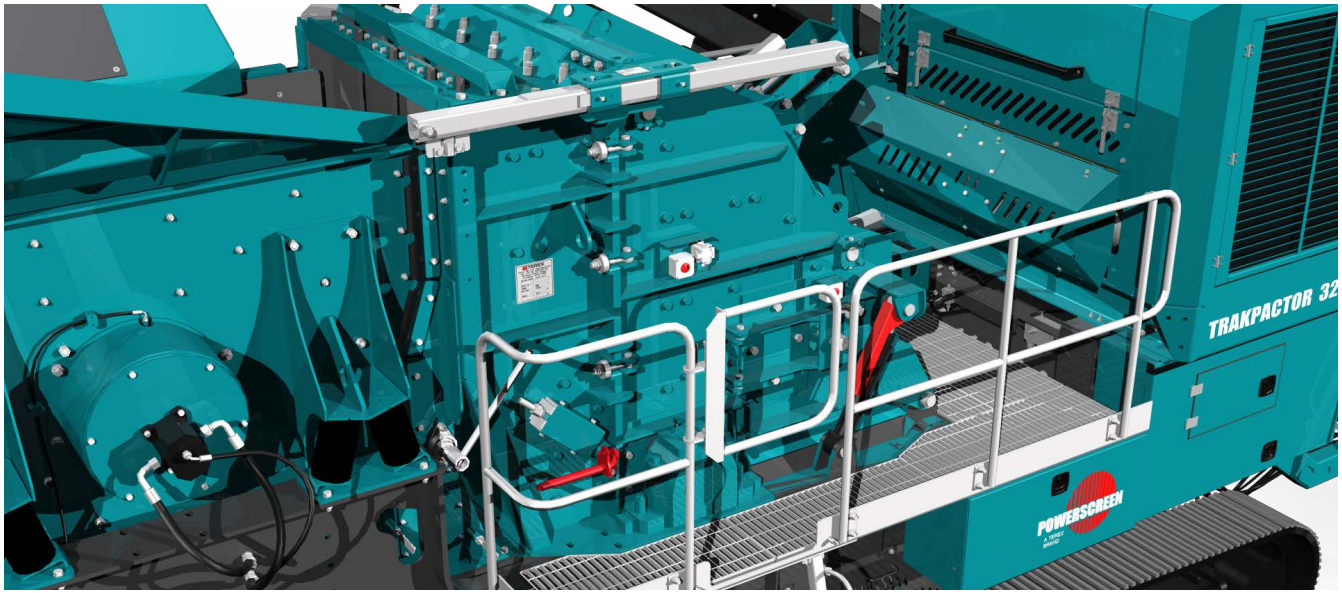

- OVERVIEW
- CRUSHER
  - CRUSHER SPECIFICATION
  - CRUSHER FEATURES
  - CRUSHER OPTIONS
- HOPPER
- VIBRATING GRIZZLY FEEDER
- PRODUCT CONVEYOR
- POWER UNIT & HYDRAULICS
- TRACKS
- POST-SCREEN
- CONVEYORS
- PLANT CONTROLS & OTHER
- OPTIONS
  - OPTIONS 2
  - OPTIONS 3
- POWERSCREEN® PULSE
- DIMENSIONS

CRUSHER OPTIONS

BLOW BAR JIB CRANE

Part No. CR014-054-601

1: Fixes to pre-existing allocated mounting points on chamber fixed body kit provides all necessary parts with no rework required

2: Pivot and track facilitates full access to blow bar and swings clear of body during operation with minimal footprint

3: 500 kg s.w.l. pulley block

4: Designed to work with chamber blow bar cradle

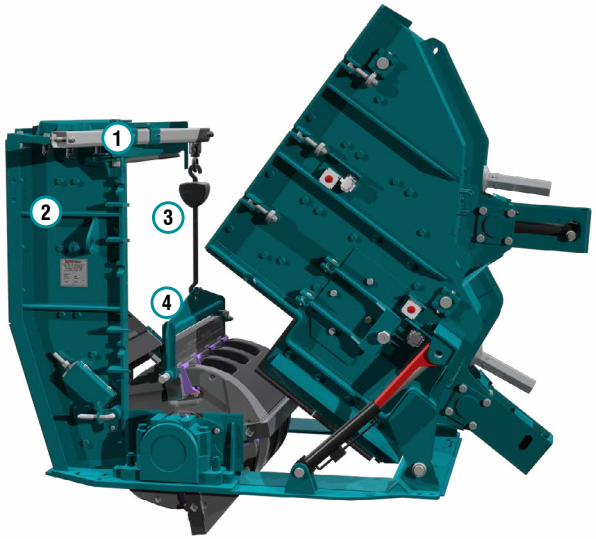

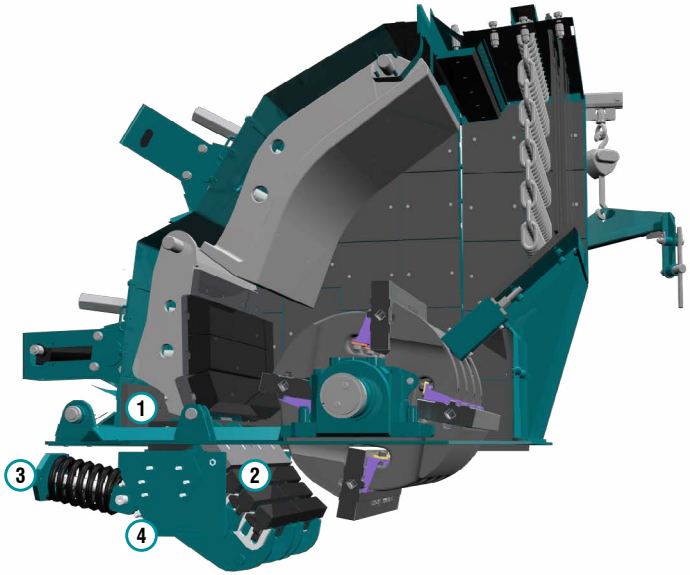

GRINDING PATH

Part No. CR014-193-601

1: Lubricated split pivot blocks for ease of maintenance

2: Self retained manganese steel grinding rails with abrasion resist -ant steel top plate

3: Lubricated adjusting spindle with provision to fit socket for ease of adjustment

4: Kit provides all necessary parts to retrofit to existing feedboot with no rework required

- OVERVIEW
- CRUSHER
  - CRUSHER SPECIFICATION
  - CRUSHER FEATURES
  - CRUSHER OPTIONS
- HOPPER
- VIBRATING GRIZZLY FEEDER
- PRODUCT CONVEYOR
- POWER UNIT & HYDRAULICS
- TRACKS
- POST-SCREEN
- CONVEYORS
- PLANT CONTROLS & OTHER
- OPTIONS
  - OPTIONS 2
  - OPTIONS 3
- POWERSCREEN® PULSE
- DIMENSIONS

HOPPER

VIBRATING GRIZZLY FEEDER HOPPER

Low profile hopper as standard, rigid hopper sides, no setup required, mounted directly to chassis

Hopper length: 4.04m (13' 3'')
Hopper width: 2.1m (6' 11')
Hopper capacity: 6.25m³ (8.2 cu. yd.) / 9m³ (11.8 cu. yd.) with extensions
Hopper body: 8mm thick abrasion resistant steel plate

- OVERVIEW
- CRUSHER
  - CRUSHER SPECIFICATION
  - CRUSHER FEATURES
  - CRUSHER OPTIONS
- HOPPER
- VIBRATING GRIZZLY FEEDER
- PRODUCT CONVEYOR
- POWER UNIT & HYDRAULICS
- TRACKS
- POST-SCREEN
- CONVEYORS
- PLANT CONTROLS & OTHER
- OPTIONS
  - OPTIONS 2
  - OPTIONS 3
- POWERSCREEN® PULSE
- DIMENSIONS

VIBRATING GRIZZLY FEEDER

Vibrating grizzly feeder pan with efficient, self cleaning integral two stage grizzly section

Type: Fully sprung vibrating pan

Length: 4.04m (13’ 3’’)

Width: 1.08m (3’ 6’’)

Pan: 10mm (0.4”) thick abrasion resistant base plate

Drive unit: Twin heavy duty cast eccentric shafts, running in spherical roller bearings, gear coupled at drive end

Drive: Flange mounted hydraulic motor

Grizzly: Two stepped bolt in cartridge sections with 950mm (3’ 1”) long self cleaning fingers set at 42mm (1.65”) nominal spacing. Optional grizzly cartridges 30mm & 60mm, optional punch plate cartridges 30mm, 45mm & 60mm

Screen: Removable rubber blanking mat fitted as standard, mesh screens optional

Control: Variable speed control via control panel & on optional radio remote where specified

Chute: Plant features bypass chute with internal two way flap door that controls the direction of fines, either forward onto product belt or down onto optional side conveyor where specified

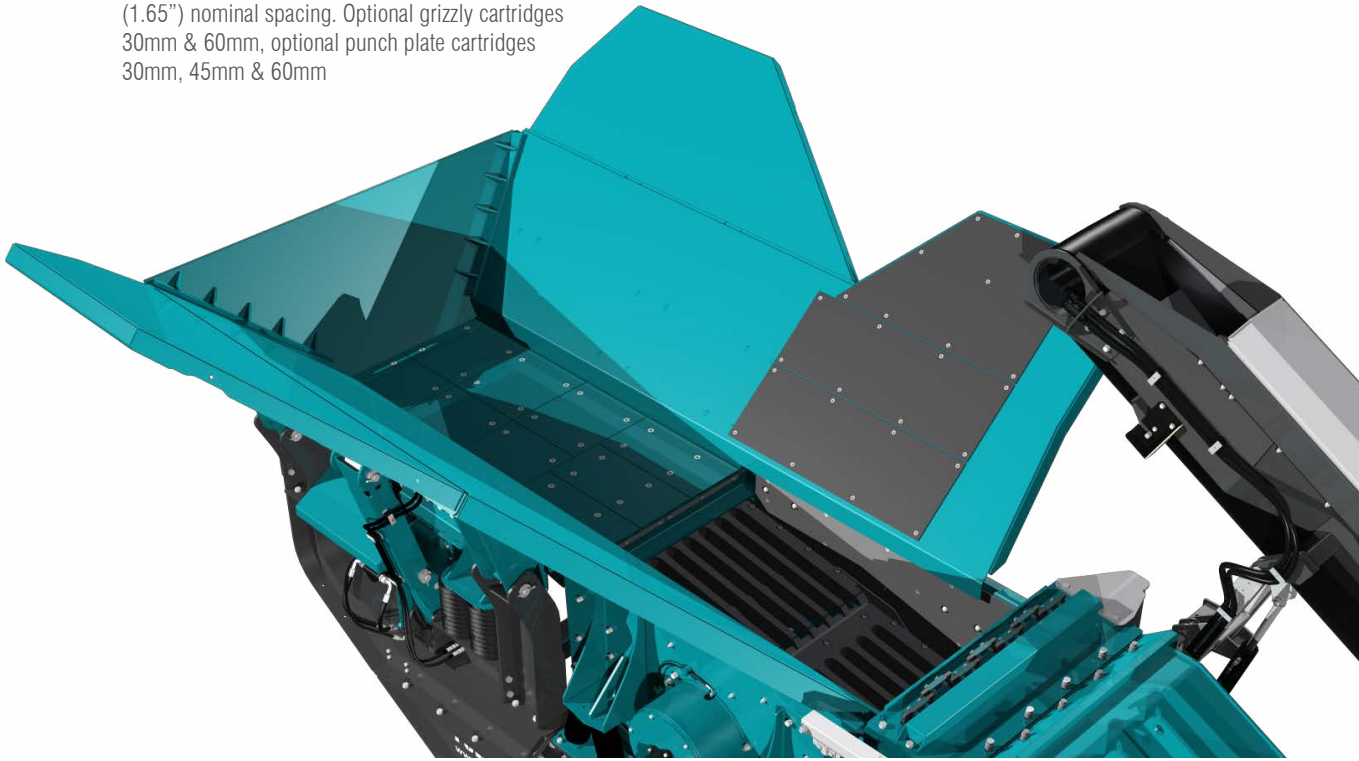

- OVERVIEW
- CRUSHER
  - CRUSHER SPECIFICATION
  - CRUSHER FEATURES
  - CRUSHER OPTIONS
- HOPPER
- VIBRATING GRIZZLY FEEDER
- PRODUCT CONVEYOR
- POWER UNIT & HYDRAULICS
- TRACKS
- POST-SCREEN
- CONVEYORS
- PLANT CONTROLS & OTHER
- OPTIONS
  - OPTIONS 2
  - OPTIONS 3
- POWERSCREEN® PULSE
- DIMENSIONS

PRODUCT CONVEYOR

PRODUCT CONVEYOR

Belt type: Toughflex SW630/2 9+3 Grade X Covers
Width: 1000mm (3' 3")
Discharge height: 3.46m (11' 4")
Stockpile volume: 76m³ (99 cu. yd.)

DUST SUPPRESSION SYSTEM

Spray bars with atomiser nozzles are mounted over the product conveyor feed & discharge points, piped to an inlet manifold for customer water supply or optional pump.

Type: Clean water multi atomising nozzles
Inlet: Single point
Inlet pressure: 3 bar (44 psi)
Water supply: 24 L/min (6.34 G/min) minimum
Frost protection: Via system main valves
Pump: Optional

TRAKPACTOR 320SR

- OVERVIEW
- CRUSHER
  - CRUSHER SPECIFICATION
  - CRUSHER FEATURES
  - CRUSHER OPTIONS
- HOPPER
- VIBRATING GRIZZLY FEEDER
- PRODUCT CONVEYOR
- POWER UNIT & HYDRAULICS
- TRACKS
- POST-SCREEN
- CONVEYORS
- PLANT CONTROLS & OTHER
- OPTIONS
  - OPTIONS 2
  - OPTIONS 3
- POWERSCREEN® PULSE
- DIMENSIONS

POWER UNIT & HYDRAULICS

Tier 3 Equivalent: Caterpillar C9.3, 6 cylinder, direct injection 250 kW (335hp)

Operating conditions: Ambient temp.+30°C to –5°C (86ºF to 23ºF) at altitudes up to 2000m (6562ft) above sea level - For applications outside this range please consult with Powerscreen as the plant performance / reliability may be affected.

Operating rpm range: 1700 - 2100rpm

Plant drive: High quality pumps driven via belts from engine

Fuel tank capacity: 500 L (132 US Gal)

Tier 4F / Stage V: Scania DC9 313A 257kW (350hp)

Operating conditions: Ambient temp.+30°C to –5°C (86ºF to 23ºF) at altitudes up to 2000m (6562ft) above sea level - For applications outside this range please consult with Powerscreen as the plant performance / reliability may be affected.

Operating rpm range: 1700 - 2100rpm

Emission control technique: Selective Catalytic Reduction (SCR)

Reductant tank size: 60 L (16 US Gal)

Plant drive: High quality tandem pumps driven via engine PTO's

Fuel tank capacity: 500 L (132 US Gal)

Hydraulic tank capacity: 550 L (145 US Gal)

Clutch type: HPTO 12 Dry clutch, electro hydraulic operation (Caterpiller Engine)

HPTO 12 Wet Clutch, electro hydraulic operation (Scania Engine)

Crusher drive: Direct drive via wedge belts,

Clutch pulley diameter 280mm (11")

Crusher pulley diameter 800mm (31.5")

Crushing performance can be tuned by changing engine speed between 1700 - 2100rpm on the PLC without significant loss of engine performance

Drive tensioning: Manually adjustable screw tensioners located under power unit

Scania Stage V / Tier 4 Final Technology

Scania industrial engines meet the requirements of Stage IV and Tier 4 Final without the need for a particulate filter. With only EGR and SCR technology, the installation will be unaffected. Scania-developed systems for engine management and emission control ensure an attractive blend of performance and operating economy.

The function of the SCR system is based on the injection of a urea solution (AdBlue or DEF, Diesel Exhaust Fluid) into the after-treatment system.

With EGR, a small amount of exhaust gases is returned to the intake of the engine, diluting the intake air and reducing the oxygen concentration. This will reduce the combustion temperature and further reduce emissions.

- OVERVIEW
- CRUSHER
  - CRUSHER SPECIFICATION
  - CRUSHER FEATURES
  - CRUSHER OPTIONS
- HOPPER
- VIBRATING GRIZZLY FEEDER
- PRODUCT CONVEYOR
- POWER UNIT & HYDRAULICS
- TRACKS
- POST-SCREEN
- CONVEYORS
- PLANT CONTROLS & OTHER
- OPTIONS
  - OPTIONS 2
  - OPTIONS 3
- POWERSCREEN® PULSE
- DIMENSIONS

TRACKS

TRACKS

Type:	Heavy duty, 2 speed, bolt on
Sprocket centres:	3.84m (12' 7")
Track width:	400mm (1'7'')
Gradeability:	30° maximum
High speed:	1.2kph (0.75 mph)
Drive:	Hydraulic
Tensioning:	Hydraulic adjuster, grease tensioned

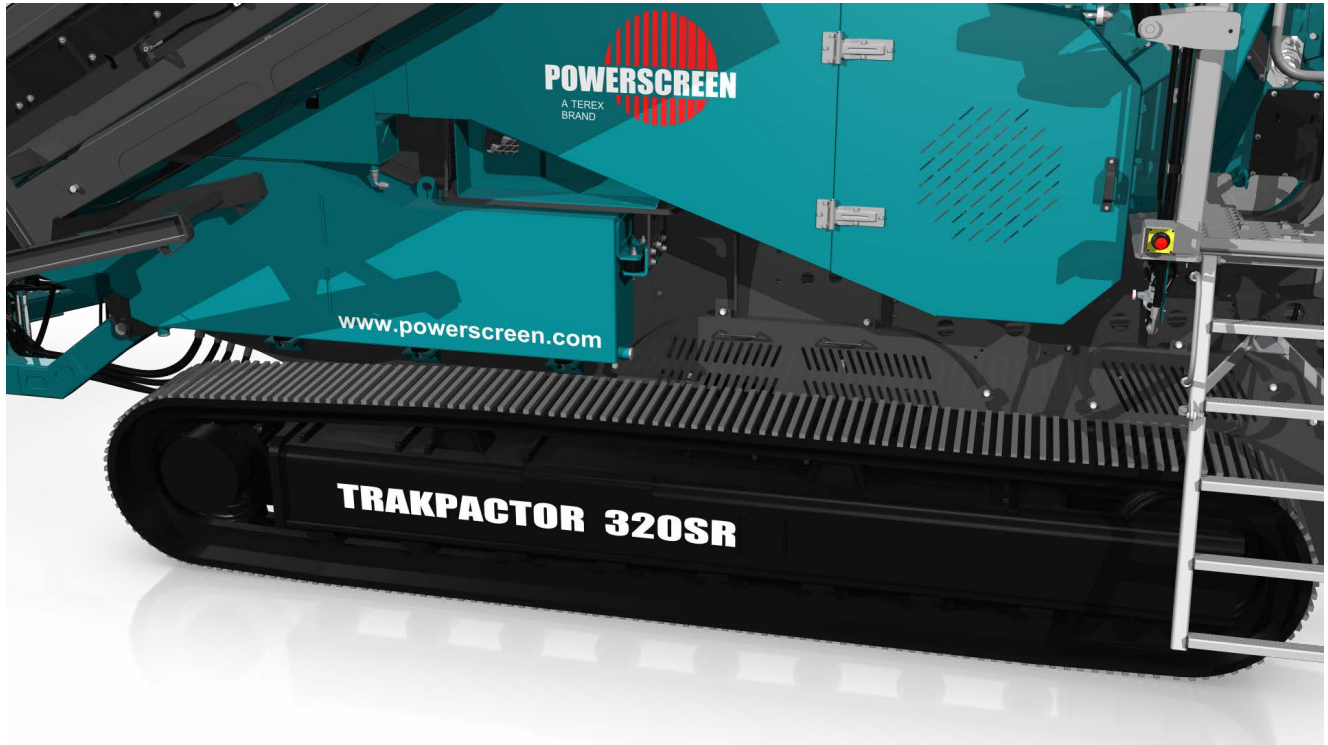

- OVERVIEW
- CRUSHER
  - CRUSHER SPECIFICATION
  - CRUSHER FEATURES
  - CRUSHER OPTIONS
- HOPPER
- VIBRATING GRIZZLY FEEDER
- PRODUCT CONVEYOR
- POWER UNIT & HYDRAULICS
- TRACKS
- POST-SCREEN
- CONVEYORS
- PLANT CONTROLS & OTHER
- OPTIONS
  - OPTIONS 2
  - OPTIONS 3
- POWERSCREEN® PULSE
- DIMENSIONS

POST-SCREEN

DOUBLE DECK POST-SCREEN

Type:	4 bearing, double deck vibrating screen
Size:	3.35m x 1.52m (11' x 5')
Screen Angle:	Can be varied between 19° -23°
Drive:	Hydraulic drive
Top deck:	45mm aperture fitted as standard
Bottom deck:	Optional mesh
Lubrication:	Grease nipples (4 in total)
Access:	Screen & fines conveyor can be lowered for maintenance

- OVERVIEW
- CRUSHER
  - CRUSHER SPECIFICATION
  - CRUSHER FEATURES
  - CRUSHER OPTIONS
- HOPPER
- VIBRATING GRIZZLY FEEDER
- PRODUCT CONVEYOR
- POWER UNIT & HYDRAULICS
- TRACKS
- POST-SCREEN
- CONVEYORS
- PLANT CONTROLS & OTHER
- OPTIONS
  - OPTIONS 2
  - OPTIONS 3
- POWERSCREEN® PULSE
- DIMENSIONS

CONVEYORS

TOP DECK - TRANSFER CONVEYOR

Belt type:	Plain belt, EP500/3 with 5mm top & 1.5mm bottom rubber covers & vulcanised joint
Belt width:	500mm (1' 8'')
Drive:	Direct drive hydraulic motor
Lubrication:	118m³ (154 cu. yd.)

OVERSIZE - RECIRCULATING CONVEYOR

Conveyor type:	Chevron type troughed belt
Belt type:	EP500/3 with 3mm top & 1.5mm bottom rubber covers, 25mm cleats & vulcanised joint
Conveyor:	Returns oversize material from the top deck back to the impactor for crushing. Conveyor can be mounted at 90 degrees to the plant to enable oversize material to be stockpiled at the side of the plant (additional kit from spares will be required for this function).
Width:	500mm (1'8'')
Drive:	Direct drive hydraulic motor
Lubrification:	Grease nipples on tail drum shaft bearing, remote grease nipples for head drum
Discharge height:	4.7m (15' 5")
Stockpile volume:	191m³ (250 cu. yd.)

FINES CONVEYOR (POST-SCREEN)

Conveyor type:	Plain troughed belt
Belt type:	EP500/3 with 5mm top & 1.5mm bottom covers, vulcanised joint
Width:	1400mm (4' 7")
Discharge height:	3.02m (9' 11")
Stockpile volume:	51m³ (66 cu. yd.)
Drive:	Direct drive hydraulic motor

BOTTOM DECK - TRANSFER CONVEYOR

Function:	Transfers material from bottom deck of sizing screen to optional plant mounted stockpiling conveyor or re-circulating conveyor
Belt type:	EP500/3 with 5mm top,1.5mm bottom covers, vulcanised joint
Belt width:	500mm (1'8'')
Drive:	Direct drive hydraulic motor
Lubrication:	Grease nipples on head & tail shaft bearings

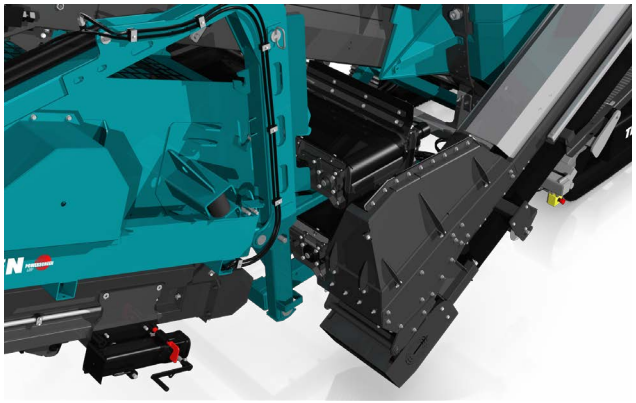

TRAKPACTOR 320SR

- OVERVIEW
- CRUSHER
  - CRUSHER SPECIFICATION
  - CRUSHER FEATURES
  - CRUSHER OPTIONS
- HOPPER
- VIBRATING GRIZZLY FEEDER
- PRODUCT CONVEYOR
- POWER UNIT & HYDRAULICS
- TRACKS
- POST-SCREEN
- CONVEYORS
- PLANT CONTROLS & OTHER
- OPTIONS
  - OPTIONS 2
  - OPTIONS 3
- POWERSCREEN® PULSE
- DIMENSIONS

PLANT CONTROLS & OTHER

GUARDING

Wire mesh or sheet metal guards are provided for all drives, flywheels, pulleys & couplings.
The guards provided are designed & manufactured to CE & ANSI standards.

CHASSIS

Heavy duty I-Section welded construction,

provides maximum strength & accessibility

8mm thick web
15mm thick flange

Modular chassis between pre-screen & VGF

RADIO REMOTE

Complete with integrated tracking functions & plant stop button.

Remote can also be used for:

- Feeder (stop/start/speed)
- Product conveyor (raise/lower)
- Open top apron

PLANT CONTROLS

Full PLC control panel

Full system diagnostics

Controls fitted to the plant include:

Sequential start up

- Engine (start/stop/speed)
- Crusher (start/stop)
- Optional dirt conveyor (start/stop)
- Feeder (start/stop/speed) controls, located on the side of the plant

UMBILICAL CONTROL

An umbilical control unit is supplied as standard with the plant.
Controls tracking function & has a stop button for the plant.

TRAKPACTOR 320SR

- OVERVIEW
- CRUSHER
  - CRUSHER SPECIFICATION
  - CRUSHER FEATURES
  - CRUSHER OPTIONS
- HOPPER
- VIBRATING GRIZZLY FEEDER
- PRODUCT CONVEYOR
- POWER UNIT & HYDRAULICS
- TRACKS
- POST-SCREEN
- CONVEYORS
- PLANT CONTROLS & OTHER
- OPTIONS
  - OPTIONS 2
  - OPTIONS 3
- POWERSCREEN® PULSE
- DIMENSIONS

OPTIONS

EXTENDED HOPPER

Hydraulic folding hopper with over centre struts. Hydraulic hopper lock system operated at ground level

Hopper width:	4m (13' 1")
Hopper capacity:	9m³ (11.8 cu. yd.)
Hopper body:	8mm (0.31") thick abrasion resistant steel plate
Weight:	1100kg (2425 lbs)

BYPASS CONVEYOR

Belt:	EP250/2 with 3mm top & 1.5mm bottom heavy duty rubber covers, vulcanised joint
Type:	Steel troughed roller, hydraulic folding
Width:	650mm (2'2'')
Discharge:	2.72m (8' 11")
Stockpile volume:	37m³ (48 cu. yd.)
Drive:	Direct drive hydraulic motor
Position:	Discharge on RHS of plant. LHS variant available
Weight:	1030 kg (2270 lbs

FEEDER UNDERSCREEN MESH

Position:	Replaces standard blanking mat, used in conjunction with optional bypass conveyor
Sizes:	10, 20, 30, 40, 50mm

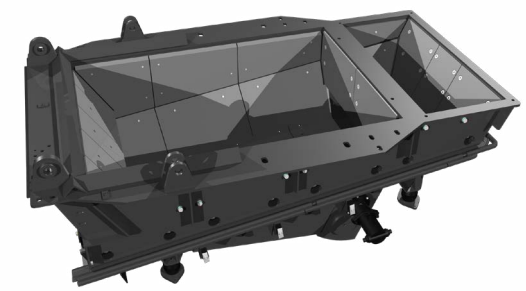

VIBRATING UNDERPAN FEEDER

Type:	Steel bodied vibrating feeder fitted
With:	Abrasion resistant liners, mounted under the crusher & designed to prevent any damage to the product conveyor belt
Width:	1.1m (3' 7")
Length:	2.47m (8' 1'')
Drive:	Hydraulic, out of balance exciter unit
Note:	When a vibrating underpan feeder is selected, the short product conveyor belt which accompanies will have the following specification: EP500/3 8+2

OVERBAND MAGNET

Magnet type:	Single Pole (SP), Twin Pole (TP) & Heavy Duty Twin Pole (HTP) available.
Belt width:	750mm (2' 6")
Centres:	1700mm (5' 7")
Drive/Control:	Direct drive hydraulic motor / pre-set variable speed
Weight:	SP 975kg / TP 1470kg / HTP 2300kg

RECIRCULATING CONVEYOR DUST COVERS

Optional dust suppression covers available to cover full length of recirculating conveyor.

- OVERVIEW
- CRUSHER
  - CRUSHER SPECIFICATION
  - CRUSHER FEATURES
  - CRUSHER OPTIONS
- HOPPER
- VIBRATING GRIZZLY FEEDER
- PRODUCT CONVEYOR
- POWER UNIT & HYDRAULICS
- TRACKS
- POST-SCREEN
- CONVEYORS
- PLANT CONTROLS & OTHER
- OPTIONS
  - OPTIONS 2
  - OPTIONS 3
- POWERSCREEN® PULSE
- DIMENSIONS

OPTIONS 2

VIBRATING PAN FEEDER

Pan type: Sprung vibrating pan

Vibrating unit: Twin heavy duty cast eccentric shafts running in spherical roller bearings, gear coupled at drive end, flange mounted hydraulic motor

Length: 2.15m (7' 1'')

Width: 1.08mm (3' 7'')

Pan: 12mm thick replaceable abrasion resistant liners

LIVE PRE-SCREEN

Pre-screen: Sprung vibrating unit with stepped finger bofor deck

Vibrating unit: Single shaft, out of balance weights, flange mounted hydraulic motor

Bofor deck: 2 stepped bolt in cartridges 50mm (2") nominal spacing 9mm throw 1000rpm screen speed

Dimension (top deck):

Length: 2m (6' 7")

Width: 1.06m (3' 6")

Mesh deck: 38mm (1.5") nominal spacing 17º incline

Dimension (bottom deck):

Length: 1.6m (5' 3")

Width: 1.06m (3' 6")

Chute: Bypass chute with internal 2 way flap door fitted, to control direction of fines, either forward onto the product belt or onto the optional side conveyor (if blanking mat is fitted)

Modular section: Hopper & feeder mounted on removable modular subframe

PRE-SCREEN HOPPER

Hydraulic folding hopper with over centre struts. Hydraulic hopper lock system operated at ground level.

Hopper width: 2.53m (8'4")

Hopper capacity: 6.25m³ (8.2 yd³)

Hopper body: 8mm (0.31") thick abrasion resistant steel plate

PRE-SCREEN HOPPER EXTENSIONS (BOLT-ON)

Hopper width: 4m (13' 2")

Hopper capacity: 9m³ (11.8 yd³)

Weight: 540kg (1190 lbs)

- OVERVIEW
- CRUSHER
  - CRUSHER SPECIFICATION
  - CRUSHER FEATURES
  - CRUSHER OPTIONS
- HOPPER
- VIBRATING GRIZZLY FEEDER
- PRODUCT CONVEYOR
- POWER UNIT & HYDRAULICS
- TRACKS
- POST-SCREEN
- CONVEYORS
- PLANT CONTROLS & OTHER
- OPTIONS
  - OPTIONS 2
  - OPTIONS 3
- POWERSCREEN® PULSE
- DIMENSIONS

OPTIONS 3

HOT/COLD CLIMATE OILS

Cold climate oils - (Recommended for ambient temperatures between -20 to +30ºC) - Hydraulic & lubrication oils only. Other component modifications may be required for low temperature operations. Please contact the Powerscreen sales & applications department with any queries.

Hot climate oils - (Recommended for ambient temperatures between +15 to +50ºC)

CONTROL PANEL POSITIVE PRESSURISATION

An additional unit designed to reduce dust particles within the control panel.
A continuous flow of clean air is passed through the cabinet whilst the unit simultaneously filters out any particulate laden air.

PLANT LIGHTING

Plant lighting kit available, contains two bi-directional working lamps. Both activated remotely from control panel.

BLOW BARS

High:	Suitable for medium to hard rock
Chrome:	Applications with no steel present in feed. Good wear characteristics
Ceramic:	Suitable for applications with limited steel in feed. Improved wear characteristics over standard martensitic
4 full blow bars:	Available in all options

BELT WEIGHER

Belt weigher system can be fitted to the product conveyor.

FOLDING MID SIZE CONVEYOR

Belt: Chevron EP315/3 with 3mm top and 1.5mm bottom heavy duty covers, vulcanised joint.

Type: Steel troughed rolle, hydraulic folding.

Width: 650mm(2' 2")

Discharge: 3.49m (11' 5")

Stockpile Volume: 63m³ (83 cu.yd.)

Drive: Direct drive hydraulic motor

Position: Discharge on RHS of plant

Weight: 2100kg (4620 lbs)

NOTE: Changes to transport dimension with this option

Transport width 3.15m and transport height of 3.6m

TRAKPACTOR 320SR

- OVERVIEW
- CRUSHER
  - CRUSHER SPECIFICATION
  - CRUSHER FEATURES
  - CRUSHER OPTIONS
- HOPPER
- VIBRATING GRIZZLY FEEDER
- PRODUCT CONVEYOR
- POWER UNIT & HYDRAULICS
- TRACKS
- POST-SCREEN
- CONVEYORS
- PLANT CONTROLS & OTHER
- OPTIONS
  - OPTIONS 2
  - OPTIONS 3
- POWERSCREEN® PULSE
- DIMENSIONS

POWERSCREEN PULSE

RECORD, DISPLAY AND ANALYSE DATA:

HIGH EFFICIENCY THROUGH PRECISE INFORMATION

Available online anywhere and at any time: comprehensive information on the GPS location, start and stop times, fuel consumption, tonnages, cone settings, wear ratings, operating hours, maintenance status, and much more.

DIMENSIONS

- OVERVIEW
- CRUSHER
  - CRUSHER SPECIFICATION
  - CRUSHER FEATURES
  - CRUSHER OPTIONS
- HOPPER
- VIBRATING GRIZZLY FEEDER
- PRODUCT CONVEYOR
- POWER UNIT & HYDRAULICS
- TRACKS
- POST-SCREEN
- CONVEYORS
- PLANT CONTROLS & OTHER
- OPTIONS
  - OPTIONS 2
  - OPTIONS 3
- POWERSCREEN® PULSE
- DIMENSIONS

Figure 1: Trakpactor 320SR
Working Position

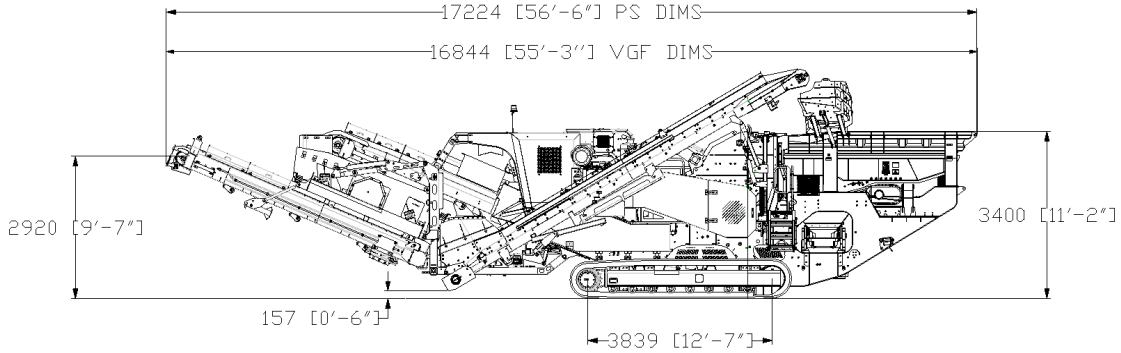

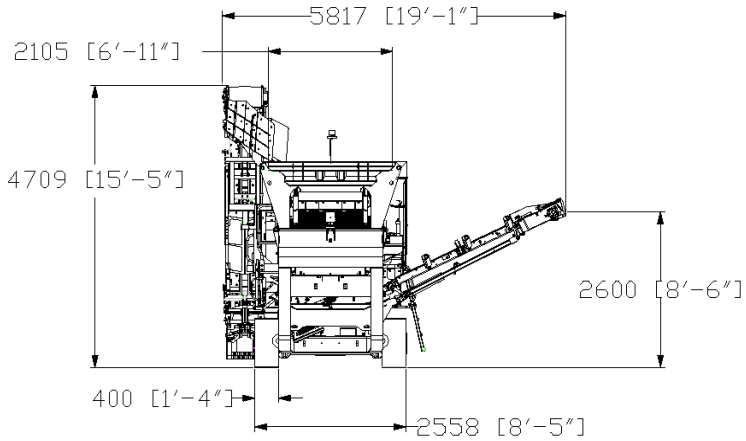

MORE DIMENSIONS OVERLEAF

DIMENSIONS

- OVERVIEW
- CRUSHER
  - CRUSHER SPECIFICATION
  - CRUSHER FEATURES
  - CRUSHER OPTIONS
- HOPPER
- VIBRATING GRIZZLY FEEDER
- PRODUCT CONVEYOR
- POWER UNIT & HYDRAULICS
- TRACKS
- POST-SCREEN
- CONVEYORS
- PLANT CONTROLS & OTHER
- OPTIONS
  - OPTIONS 2
  - OPTIONS 3
- POWERSCREEN® PULSE
- DIMENSIONS

Figure 2: Trakpactor 320SR
Transport Position

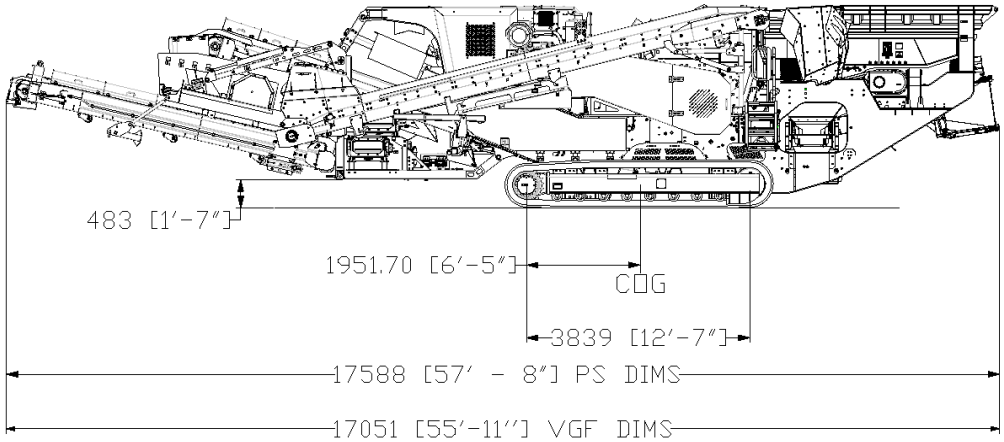

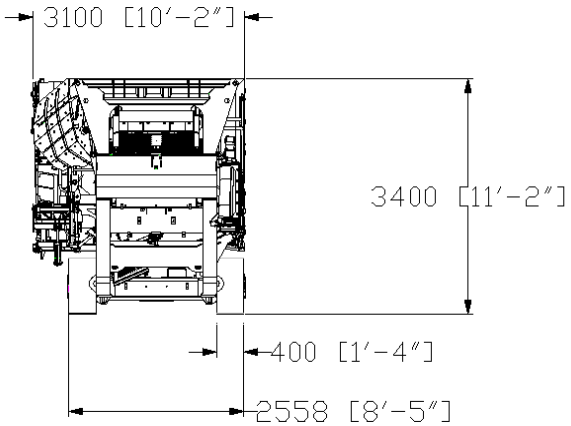

DIMENSIONS

- OVERVIEW
- CRUSHER
  - CRUSHER SPECIFICATION
  - CRUSHER FEATURES
  - CRUSHER OPTIONS
- HOPPER
- VIBRATING GRIZZLY FEEDER
- PRODUCT CONVEYOR
- POWER UNIT & HYDRAULICS
- TRACKS
- POST-SCREEN
- CONVEYORS
- PLANT CONTROLS & OTHER
- OPTIONS
  - OPTIONS 2
  - OPTIONS 3
- POWERSCREEN® PULSE
- DIMENSIONS

Figure 3: Trakpactor 320SR Folding Mid Grade Conveyor Working Position

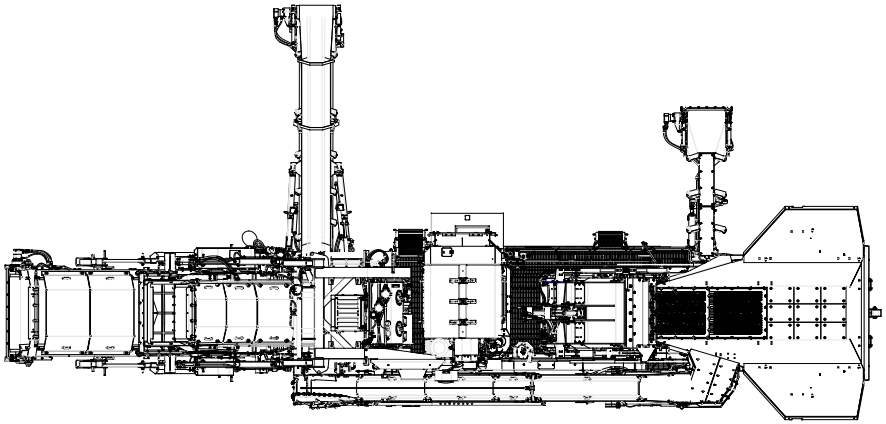

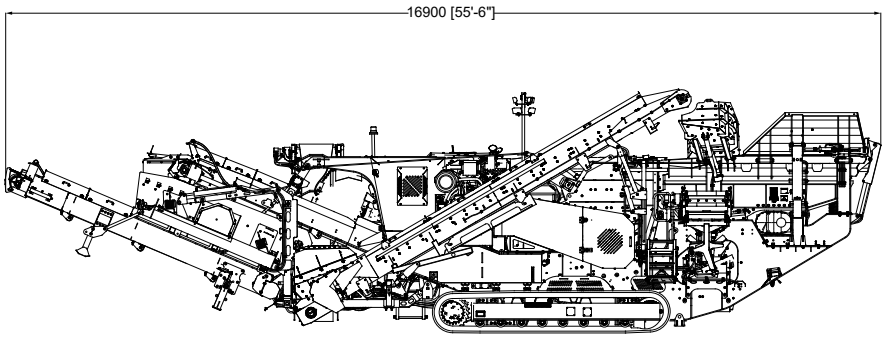

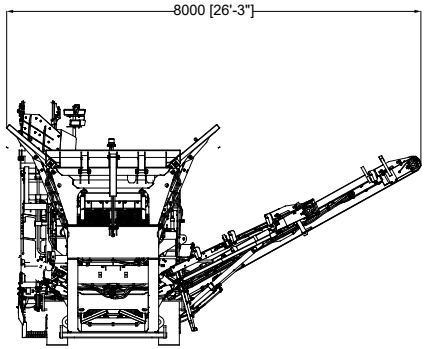

DIMENSIONS

- OVERVIEW
- CRUSHER
  - CRUSHER SPECIFICATION
  - CRUSHER FEATURES
  - CRUSHER OPTIONS
- HOPPER
- VIBRATING GRIZZLY FEEDER
- PRODUCT CONVEYOR
- POWER UNIT & HYDRAULICS
- TRACKS
- POST-SCREEN
- CONVEYORS
- PLANT CONTROLS & OTHER
- OPTIONS
  - OPTIONS 2
  - OPTIONS 3
- POWERSCREEN® PULSE
- DIMENSIONS

Figure 4: Trakpactor 320SR Folding Mid Grade Conveyor
Transport Position

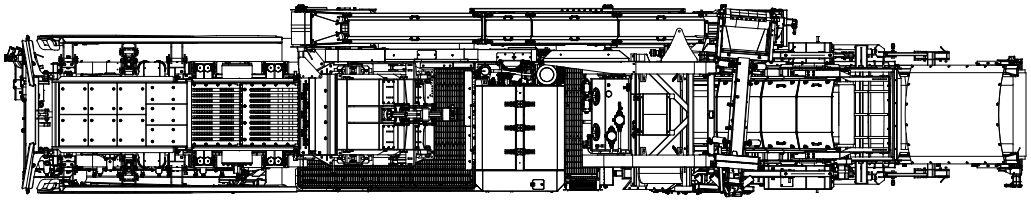

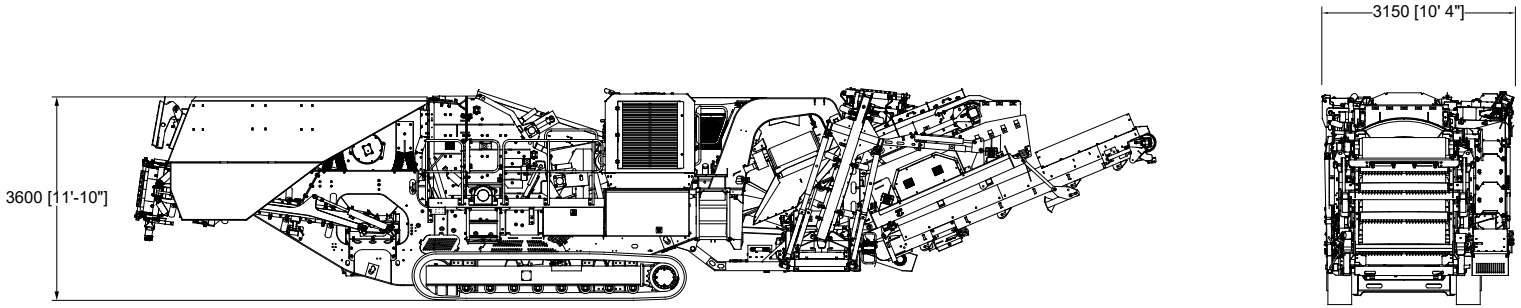

Powerscreen equipment complies with CE requirements.

Please consult Powerscreen if you have any other specific requirements in respect of guarding, noise or vibration levels, dust emissions, or any other factors relevant to health and safety measures or environmental protection needs. On receipt of specific requests, we will endeavour to ascertain the need for additional equipment and, if appropriate, quote extra to contract prices.

All reasonable steps have been taken to ensure the accuracy of this publication, however due to a policy of continual product development we reserve the right to change specifications without notice.

It is the importers' responsibility to check that all equipment supplied complies with local legislation regulatory requirements.

Plant performance figures given in this brochure are for illustration purposes only and will vary depending upon various factors, including feed material gradings and characteristics. Information relating to capacity or performance contained within this publication is not intended to be, nor will be, legally binding.

GET IN TOUCH

Dungannon
200 Coalisland Road, Dungannon,
Co Tyrone, BT71 4DR, Northern Ireland
Tel: +44 (0) 28 87 718 500
Fax: +44 (0) 28 87 747 231

Louisville
11001 Electron Drive,
Louisville, Kentucky, 40299 USA
Tel: +1 502 736 5200
Fax: +1 502 736 5202

www.powerscreen.com